ITEM #

MODEL #

NAME #

SIS #

AIA #

Vegetable Washer
Vegetable Washer with Tank
8-30kg

660031 (LV200)

Vegetable washer with fixed well capacity 200 lt, charge for cycle: 8/30 Kg

Short Form Specification

Item No.

Made from 304 AISI stainless steel. Work area in non-toxic material.
Double inclined well bottom to allow automatic cleaning. Perforated stainless steel base filter easily removable; overflow and filter in 304 AISI stainless steel. Height-adjustable feet. Washing system by water vortex; automatic water filling.
Well capacity: 200 lt. Load per cycle: 8 kg (light vegetables); 30 kg (heavy vegetables). Cycle duration: 2-3 min.

APPROVAL:

Main Features

- Work area in non-toxic material compatible with the use of food.
- Double inclined well bottom to allow automatic cleaning of the unit.
- Washing well shaped to achieve an efficient water vortex.
- "Soft-action" manual ball valve regulates the wash water loading and pressure.
- Water inlet to unit via a solenoid valve.
- Simple control panel with a well drainage switch and knob to regulate recirculating water intensity.
- Cycle duration of 2 to 3 minutes.
- Mounted on adjustable stainless steel legs.
- IP25 protection against water jets, solid objects and small animals (larger than 6 mm).

Construction

- 304 AISI stainless steel construction throughout.
- Wells to have a capacity of 8 kg of light vegetables or 30 kg of heavy vegetables per cycle.

Vegetable Washer
Vegetable Washer with Tank 8-30kg

Vegetable Washer
Vegetable Washer with Tank 8-30kg

Front

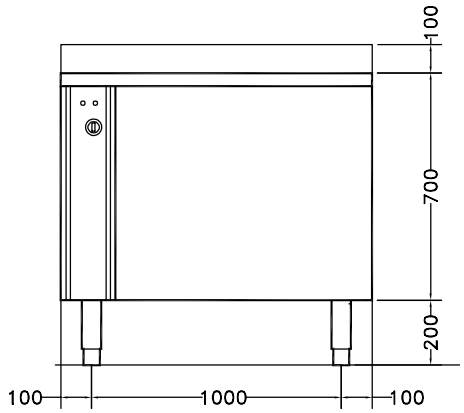

Side

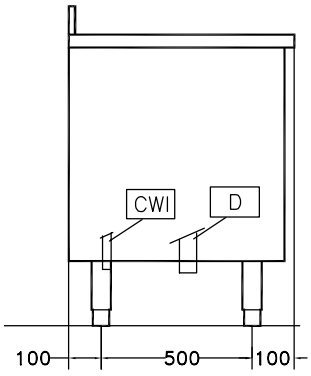

CWI1 = Cold Water inlet 1 (cleaning)
D = Drain
EI = Electrical inlet (power)

Top

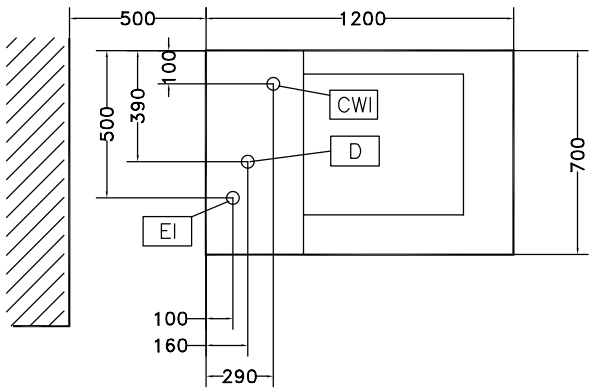

Electric	
Total Watts:	1.1 kW

Key Information:	
External dimensions, Width:	1200 mm
External dimensions, Depth:	700 mm
External dimensions, Height:	850 mm
Shipping weight:	133 kg
Usable well capacity:	200 lt
Load per cycle - light vegetables:	8 kg
Load per cycle - heavy vegetables:	30 kg

The company reserves the right to make modifications to the products without prior notice. All information correct at time of printing.

2026.02.10